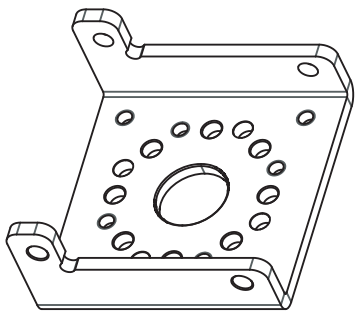

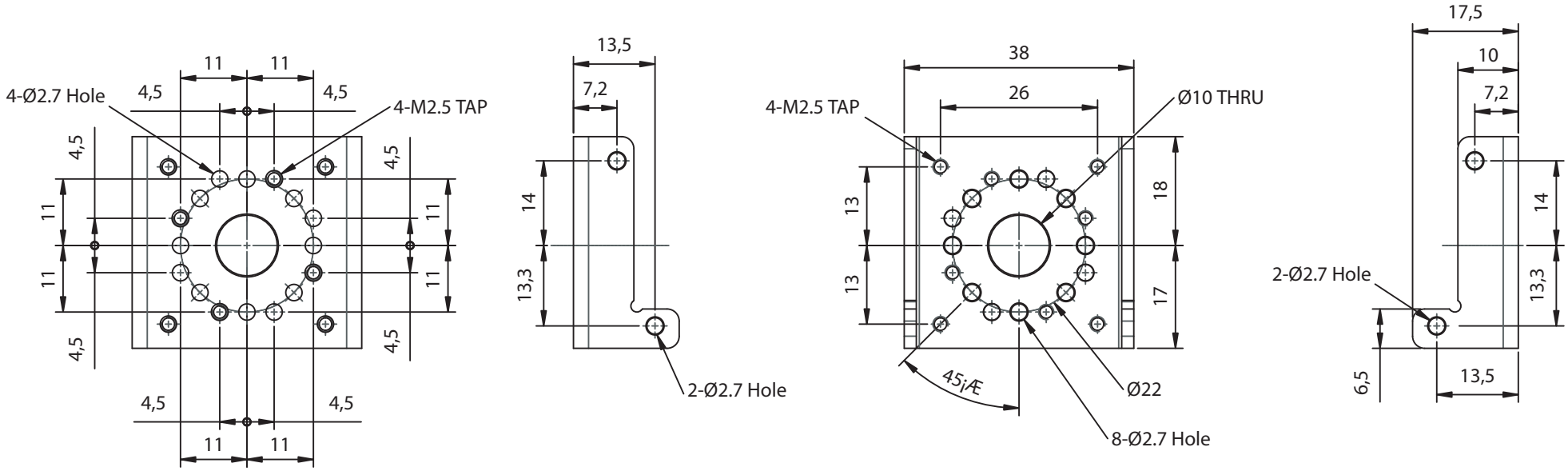

[FOR REFERENCE ONLY]

Title	OF-64S2		Scale	Unit	Sheet	ROBOTIS
Material	AL	Date 09/27/2006	1/1	mm	1 of 2	A4